PatriotSolarGroup

# Delta 2 High

## 5 Panel Ballasted Mount

- (Patent Pending)

## Delta - 2 Portrait

2 - High Ballasted Ground Mount

## Light-Weight Solution For Any Terrain

The Delta is a non-penetrating ballasted ground mount system for any size solar installation. Benefits include several adjustment features varying terrain as well as UL 467 integrated grounding mid clamps. The Delta is an ideal solution for landfills, brownfields, rocky soils, and impenetrable ground conditions. Patriot can install over 1 MW per week with a 6 man crew.

### Starter Section

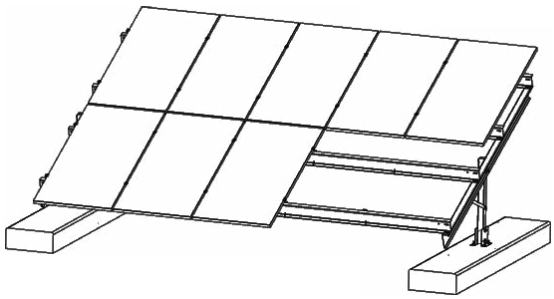

Rail Attachment

### Add-On Section

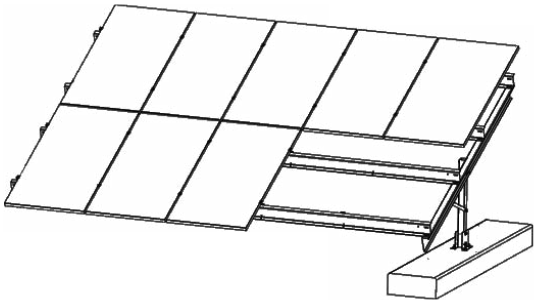

## Key Features

- 100% galvanized material
- Ideal for any scale project
- Can be installed on un-even terrain
- Minimal components for quick installation
- UL 467 grounding mid clamps
- Optimal solution for landfills and brownfields
- Accomodates both 60 and 72 - cell panels
- Standard tilt angles between 5° - 40°

*"Your Single Solar Source"*

# Delta - 2

*10 panel ballasted ground mount*

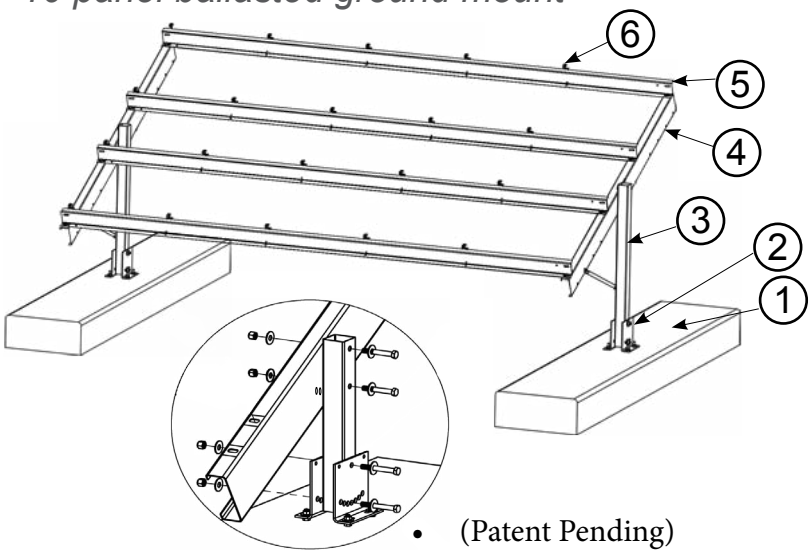


• (Patent Pending)

Detail A

## Technical Specifications

| | |
|---|---|
| **Application** | Open Field, Brownfields & Landfill |
| **Foundation** | Concrete Ballast Block |
| **Module Orientation** | Portrait |
| **Module Compatibility** | All Major Brands - 60 & 72 Cell Modules |
| **Available Tilt Angles** | 5° - 40° |
| **Ground Clearance** | Standard - 24" |
| **Grade of Terrain** | NS = 20° / EW = 5° |
| **Wind Load** | Up to 100 MPH * Higher Wind Options Available |
| **Snow Load** | Up to 80 PSF * |
| **Purlin Length** | 207" |
| **Material Composition** | Galvanized Steel Concrete Ballast Block |
| **Warranty** | 20 Years |
| **Manufacturing** | Made in USA |

## Major Components

### 1 Concrete Ballast Block

**Available in multiple sizes to meet various wind loads, tilt angles, and height clearances. 10"x24"x60" Ballast Block weighs 1250 lbs. 10"x30"x60" Ballast Block weighs 1850 lbs.**

### 2 Post Mounting Bracket

**Pre-punched holes allow for tilt North / South adjustment to follow land contours with 0° - 20° of adjustability.**

### 3 Adjustable Post

**Multiple lengths available to meet various height clearances. Includes 1" increment holes for in field vertical adjustment.**

### 4 Stamped Truss

**Pre-punched truss design allows for faster connection to post. 5° - 40° tilt angles available in 5° increments.**

### 5 Stamped Purlin

**Quick assembly with easy adjustment. slide add-on Purlin into preceding Purlin section without the need for additional assembly hardware or splice bar.**

### 6 Mid & End Clamps

**Includes integrated UL 467 grounding mid clamps. Adjustable to accomodate all major module thicknesses from 30 mm - 50 mm.**

| No. | Part | Starter Section | Add-On Section |
|---|---|---|---|
| 1. | 10" Concrete Ballast with Hilti-Bolt 96" X 10" X 24" or 30"<br><br>10" x 24" x 96" Block - 2300 lbs<br>10" x 30" x 96" Block - 2880 lbs | 2 pcs | 1 pc |
| 2. | Post Mounting Bracket | 4 pcs | 4 pcs |
| 3. | Adjustable Post, 3" X 3" X 26" | 2 pcs | 1 pc |
| 4. | 120" Stamped Truss | 2 pcs | 1 pc |
| 5. | 207", 11 GA, Stamped Purlin | 4 pcs | 4 pcs |
| 6. | Mid & End Clamps | 24 pcs | 24 pcs |
| All assembly hardware included. | | | |

*Snow loads are ground snow loads estimated at 40 deg.
*wind loads are estimated at 10 deg.
*Loading is single factor snow only or wind only.
*All specifications subject to change without notice.


PatriotSolarGroup
www.PatriotSolarGroup.com
1007 Industrial Blvd
Albion, Michigan 49224
(517) 629-9292
info@PatriotSolarGroup.com